Unitrode Products
from Texas Instruments

application INFO available

UC1861-1868
UC2861-2868
UC3861-3868

Resonant-Mode Power Supply Controllers

FEATURES

- Controls Zero Current Switched (ZCS) or Zero Voltage Switched (ZVS) Quasi-Resonant Converters
- Zero-Crossing Terminated One-Shot Timer
- Precision 1%, Soft-Started 5V Reference
- Programmable Restart Delay Following Fault
- Voltage-Controlled Oscillator (VCO) with Programmable Minimum and Maximum Frequencies from 10kHz to 1MHz
- Low Start-Up Current (150µA typical)
- Dual 1 Amp Peak FET Drivers
- UVLO Option for Off-Line or DC/DC Applications

DESCRIPTION

The UC1861-1868 family of ICs is optimized for the control of Zero Current Switched and Zero Voltage Switched quasi-resonant converters. Differences between members of this device family result from the various combinations of UVLO thresholds and output options. Additionally, the one-shot pulse steering logic is configured to program either on-time for ZCS systems (UC1865-1868), or off-time for ZVS applications (UC1861-1864).

The primary control blocks implemented include an error amplifier to compensate the overall system loop and to drive a voltage controlled oscillator (VCO), featuring programmable minimum and maximum frequencies. Triggered by the VCO, the one-shot generates pulses of a programmed maximum width, which can be modulated by the Zero Detection comparator. This circuit facilitates "true" zero current or voltage switching over various line, load, and temperature changes, and is also able to accommodate the resonant components' initial tolerances.

Under-Voltage Lockout is incorporated to facilitate safe starts upon power-up. The supply current during the under-voltage lockout period is typically less than 150µA, and the outputs are actively forced to the low state.

(continued)

Datasheet Support

Device	1861	1862	1863	1864	1865	1866	1867	1868
UVLO	16.5/10.5	16.5/10.5	8/7	8/7	16.5/10.5	16.5/10.5	8/7	8/7
Outputs	Alternating	Parallel	Alternating	Parallel	Alternating	Parallel	Alternating	Parallel
"Fixed"	Off Time	Off Time	Off Time	Off Time	On Time	On Time	On Time	On Time

BLOCK DIAGRAM

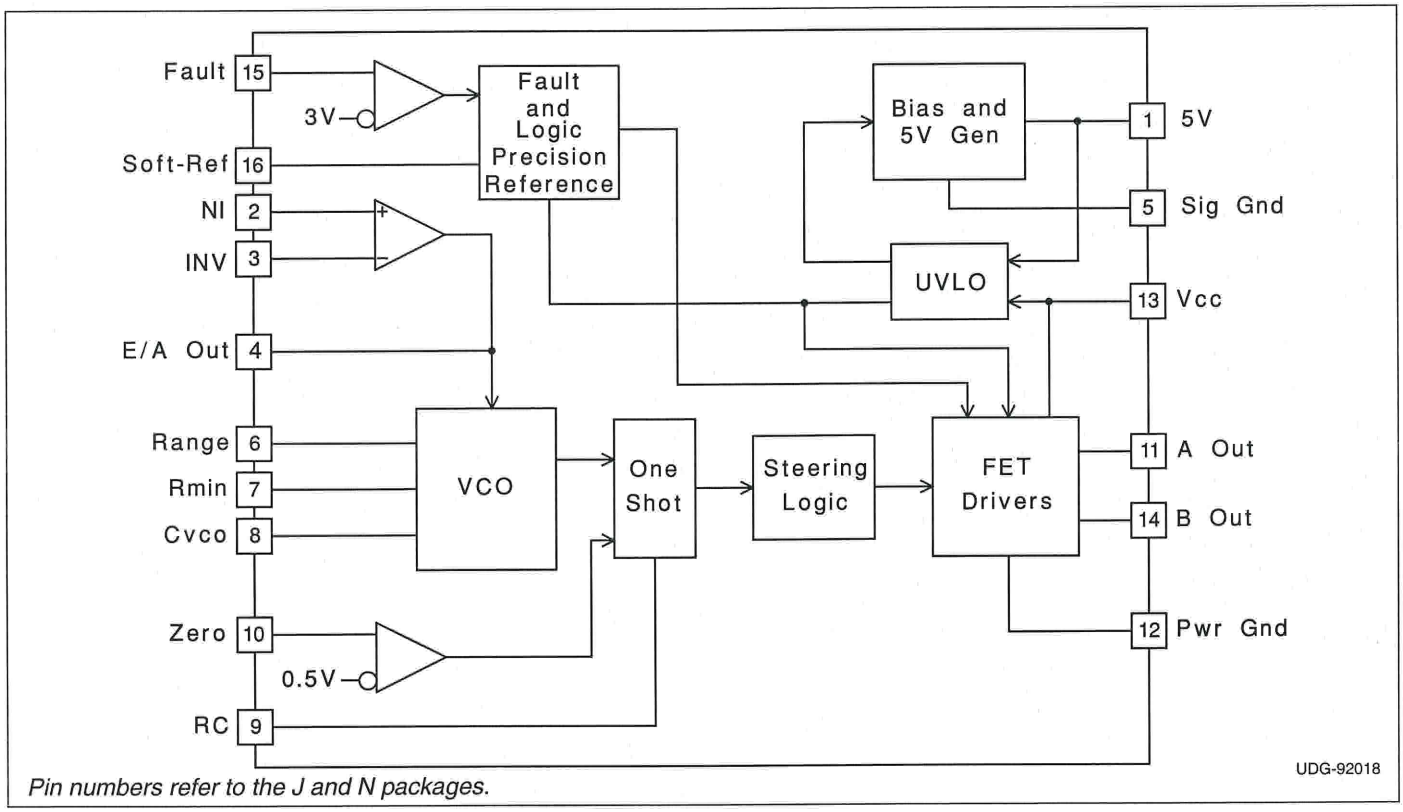

Pin numbers refer to the J and N packages.

DESCRIPTION (cont.)

UVLO thresholds for the UC1861/62/65/66 are 16.5V (ON) and 10.5V (OFF), whereas the UC1863/64/67/68 thresholds are 8V (ON) and 7V (OFF). After V_{CC} exceeds the UVLO threshold, a 5V generator is enabled which provides bias for the internal circuits and up to 10mA for external usage.

A Fault comparator serves to detect fault conditions and set a latch while forcing the output drivers low. The Soft-Ref pin serves three functions: providing soft start, restart delay, and the internal system reference.

Each device features dual 1 Amp peak totem pole output drivers for direct interface to power MOSFETS. The outputs are programmed to alternate in the UC1861/63/65/67 devices. The UC1862/64/66/68 outputs operate in unison alllowing a 2 Amp peak current.

ABSOLUTE MAXIMUM RATINGS

V_{CC} 22V
Output Current
  Source or Sink (Pins 11 & 14) 0.5A
  DC Pulse (0.5µs) 1.5A
Power Ground Voltage ..... ±0.2V
Inputs (Pins 2, 3, 10, & 15) ..... –0.4 to 7V
Error Amp Output Current ..... ±2mA
Power Dissipation 1W
Junction Temperature (Operating) ..... 150°C
Lead Temperature (Soldering, 10 seconds) ..... 300°C

All voltages are with respect to signal ground and all currents are positive into the specified terminal. Pin numbers refer to the J and N packages. Consult Unitrode Integrated Circuits databook for information regarding thermal specifications and limitations of packages.

DIL-16, SOIC-16 (Top View)
J or N, DW Packages

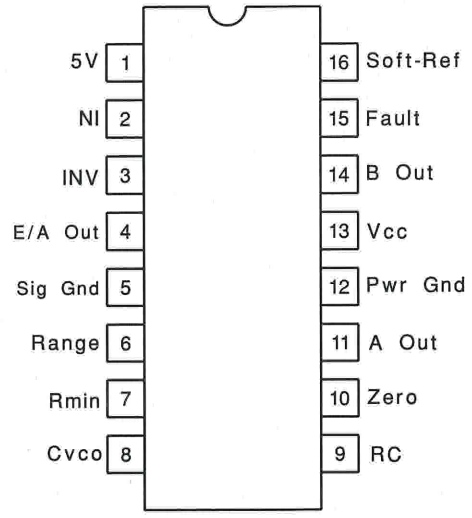

CONNNECTION DIAGRAMS

PLCC-20 & LCC-20 (Top View)
Q & L Package

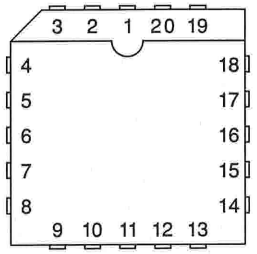

PACKAGE PIN FUNCTION	
FUNCTION	**PIN**
Soft Ref	1
5V	2
NI	3
INV	4
E/A Out	5
Sig Gnd	6
Range	7
RMIN	8
Cvco	9
RC	10
Zero	11
NC	12
NC	13
A Out	14
Pwr Gnd	15
Pwr Gnd	16
Vcc	17
B Out	18
NC	19
Fault	20

ELECTRICAL CHARACTERISTICS Unless otherwise stated, all specifications apply for –55°C≤TA≤125°C for the UC186x, –25°C≤TA≤85°C for the UC286x, and 0°C≤TA≤70°C for the UC386x, VCC=12V, CVCO=1nF, Range=7.15k, RMIN=86.6k, C=200pF, R=4.02k, and Csr=0.1µF. TA=TJ.

PARAMETER	TEST CONDITIONS	MIN	TYP	MAX	UNITS
5V Generator					
Output Voltage	12V ≤ Vcc ≤ 20V, –10mA ≤ Io ≤ 0mA	4.8	5.0	5.2	V
Short Circuit Current	Vo = 0V	–150		–15	mA
Soft-Reference					
Restart Delay Current	V = 2V	10	20	35	µA
Soft Start Current	V = 2V	–650	–500	–350	µA
Reference Voltage	TJ = 25°C, Io = 0A	4.95	5.00	5.05	V
	12V ≤ Vcc ≤ 20V, –200µA ≤ Io ≤ 200µA	4.85		5.15	V
Line Regulation	12V ≤ Vcc ≤ 20V		2	20	mV
Load Regulation	–200µA ≤ Io ≤ 200µA		10	30	mV
Error Amplifier (Note 3)					
Input Offset Voltage	VCM = 5V, Vo = 2V, Io = 0A	–10		10	mV
Input Bias Current	VCM = 0V	–2.0	–0.3		µA
Voltage Gain	Vcm = 5V, 0.5V ≤ Vo ≤ 3.7V, Io = 0A	70	100		dB
Power Supply Rejection Ratio	Vcm = 5V, Vo = 2V, 12V ≤ Vcc ≤ 20V	70	100		dB
Error Amplifier (Note 3) (cont.)					
Common Mode Rejection Ratio	0V ≤ Vcm ≤ 6V, Vo = 2V	65	100		dB
VOUT Low	VID = –100mV, Io = 200µA		0.17	0.25	V
VOUT High	VID = 100mV, Io = –200µA	3.9	4.2		V
Unity Gain Bandwidth	(Note 4)	0.5	0.8		MHz
Voltage Controlled Oscillator					
Maximum Frequency	VID (Error Amp) = 100mV, TJ = 25°C	450	500	550	kHz
	VID (Error Amp) = 100mV	425		575	kHz
Minimum Frequency	VID (Error Amp) = –100mV, TJ = 25°C	45	50	55	kHz
	VID (Error Amp) = –100mV	42		58	kHz
One Shot					
Zero Comparator Vth		0.45	0.50	0.55	V
Propagation Delay	(Note 4)		120	200	ns
Maximum Pulse Width	VZERO = 1V	850	1000	1150	ns
Maximum to Minimum Pulse Width Ratio	VZERO = 0V UCx861 – UCx864	2.5	4	5.5	
	VZERO = 0V UCx865 – UCx868. –55°C to +85°C	4	5.5	7	
	VZERO = 0V UCx865 – UCx868, +125°C	3.8	5.5	7	
Output Stage					
Rise and Fall Time	CLOAD = 1nF (Note 4)		25	45	ns
Output Low Saturation	Io = 20mA		0.2	0.5	V
	Io = 200mA		0.5	2.2	V
Output High Saturation	Io = –200mA, down from Vcc		1.7	2.5	V
UVLO Low Saturation	Io = 20mA		0.8	1.5	V
Fault Comparator					
Fault Comparator Vth		2.85	3.00	3.15	V
Delay to Output	(Note 4) (Note 5)		100	200	ns

ELECTRICAL CHARACTERISTICS Unless otherwise stated, all specifications apply for –55°C≤TA≤125°C for the UC186x, –25°C≤TA≤85°C for the UC286x, and 0°C≤TA≤70°C for the UC386x, VCC=12V, CVCO=1nF, Range=7.15k, RMIN=86.6k, C=200pF, R=4.02k, and Csr=0.1µF. TA=TJ.

PARAMETER	TEST CONDITIONS	MIN	TYP	MAX	UNITS
UVLO					
Vcc Turn-on Threshold	UCx861, UCx862, UCx865, UCx866	15	16.5	18	V
	UCx863, UCx864, UCx867, UCx868	7	8.0	9	V
Vcc Turn-off Threshold	UCx861, UCx862, UCx865, UCx866	9.5	10.5	11.5	V
	UCx863, UCx864, UCx867, UCx868	6	7.0	8	V
Icc Start	VCC = Vcc(on) – 0.3V		150	300	µA
Icc Run	VID = 100mV		25	32	mA

Note 1: Currents are defined as positive into the pin.
Note 2: Pulse measurement techniques are used to insure that TJ = TA.
Note 3: VID = V(NI) – V(INV).
Note 4: This parameter is not 100% tested in production but guaranteed by design.
Note 5: Vi = 0 to 4V tr(Vi) 10ns tpd = t(Vo = 6V) – t(Vi = 3V)

APPLICATION INFORMATION

UVLO & 5V GENERATOR (See Figure 1): When power is applied to the chip and Vcc is less than the upper UVLO threshold, Icc will be less than 300µA, the 5V generator will be off, and the outputs will be actively held low.

When Vcc exceeds the upper UVLO threshold, the 5V generator turns on. Until the 5V pin exceeds 4.9V, the outputs will still remain low.

The 5V pin should be bypassed to signal ground with a 0.1µF capacitor. The capacitor should have low equivalent series resistance and inductance.

FAULT AND SOFT-REFERENCE (See Figure 1): The Soft-Ref pin serves three functions: system reference, restart delay, and soft-start. Designed to source or sink 200µA, this pin should be used as the input reference for the error amplifier circuit. This pin requires a bypass capacitor of at least 0.1µF. This yields a minimum soft-start time of 1ms.

Under-Voltage Lockout sets both the fault and restart delay latches. This holds the outputs low and discharges the Soft-Ref pin. After UVLO, the fault latch is reset by the low voltage on the Soft-Ref pin. The reset fault latch resets the delay latch and Soft-Ref charges via the 0.5mA current source.

The fault pin is input to a high speed comparator with a threshold of 3V. In the event of a detected fault, the fault latch is set and the outputs are driven low. If Soft-Ref is above 4V, the delay latch is set. Restart delay is timed as Soft-Ref is discharged by 20µA. When Soft-Ref is fully discharged, the fault latch is reset if the fault input signal is low. The Fault pin can be used as a system shutdown pin.

If a fault is detected during soft-start, the fault latch is set and the outputs are driven low. The delay latch will remain reset until Soft-Ref charges to 4V. This sets the delay latch, and restart delay is timed. Note that restart delay for a single fault event is longer than for recurring faults since Soft-Ref must be discharged from 5V instead of 4V.

The restart delay to soft-start time ratio is 24:1 for a fault occurring during normal operation and 19:1 for faults occurring during soft-start. Shorter ratios can be programmed down to a limit of approximately 3:1 by the addition of a 20kΩ or larger resistor from Soft-Ref to ground.

A 100kΩ resistor from Soft-Ref to 5V will have the effect of permanent shut down after a fault since the internal 20µA current source can't pull Soft-Ref low. This feature can be used to require recycling Vcc after a fault. Care must be taken to insure Soft-Ref is indeed low at start up, or the fault latch will never be reset.

APPLICATION INFORMATION

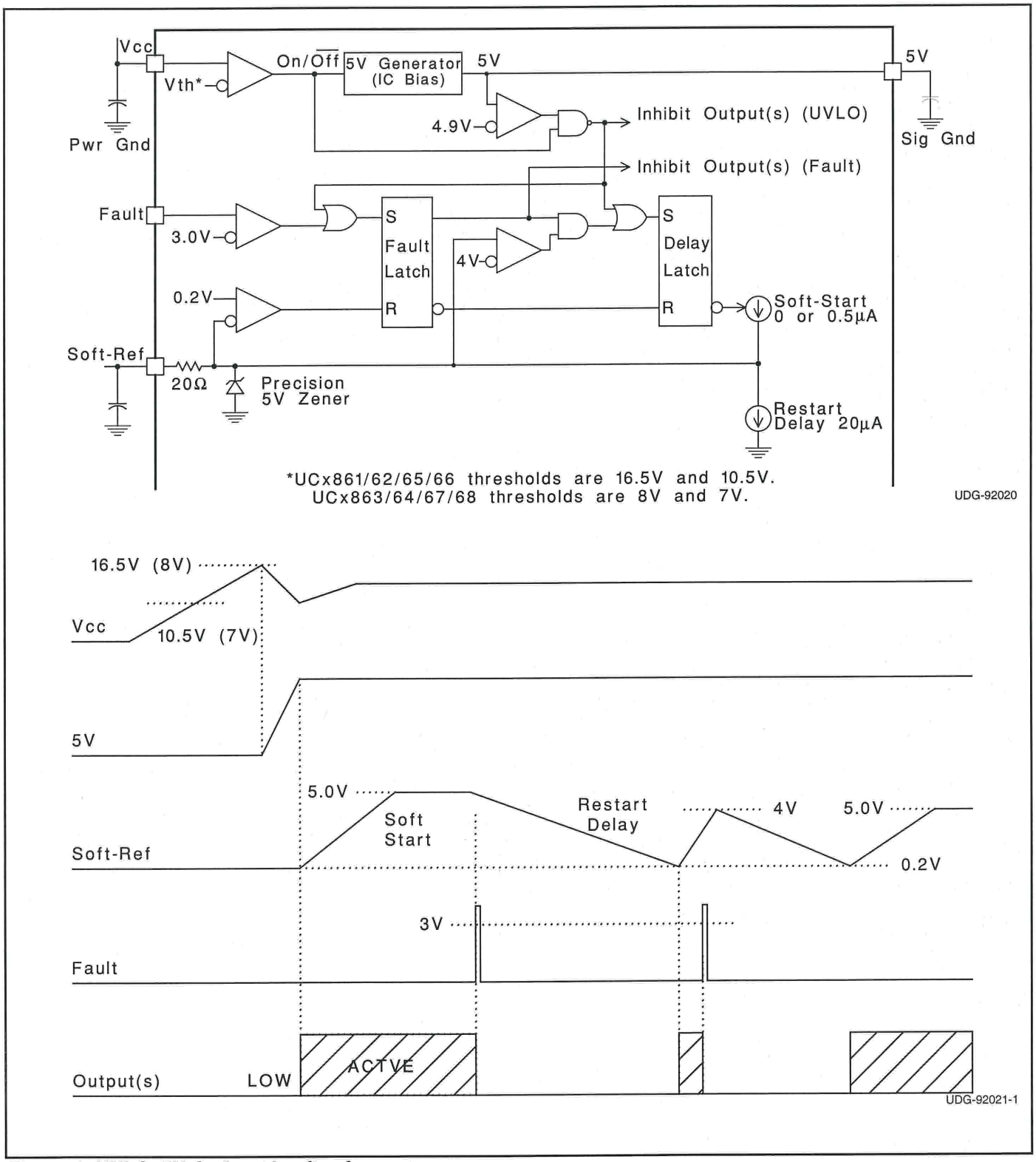

Figure 1. UVLO, 5V, fault and soft-ref.

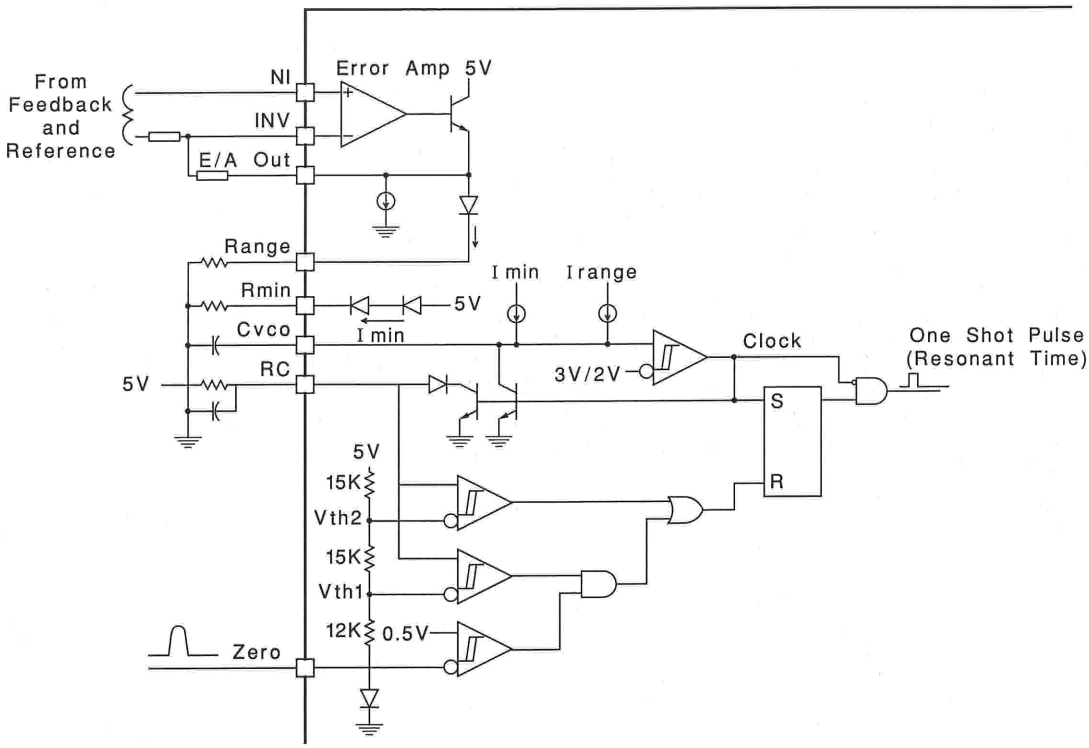

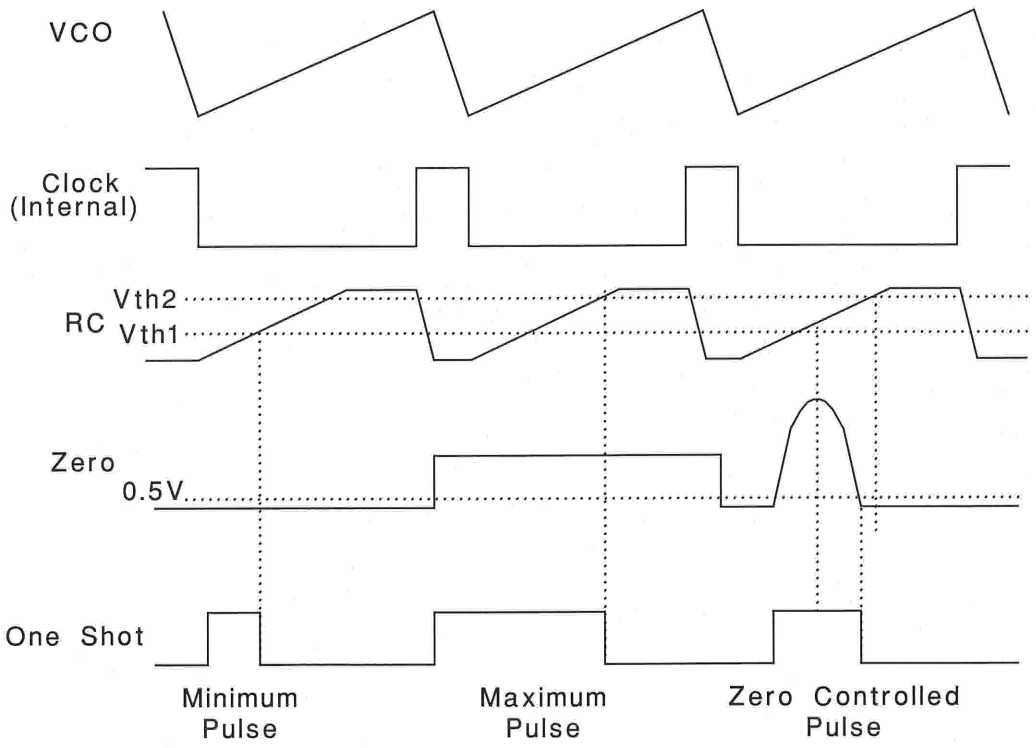

Figure 2. Error Amp, Voltage Controlled Oscillator, and One Shot

APPLICATION INFORMATION

Minimum oscillator frequency is set by Rmin and Cvco. The minimum frequency is approximately given by the equation:

$$F_{MIN} \cong \frac{3.6}{R_{MIN} \bullet C_{VCO}}$$

Maximum oscillator frequency is set by Rmin, Range & Cvco. The maximum frequency is approximately given by the equation:

$$F_{MAX} \cong \frac{3.6}{(R_{MIN} \,//\, Range) \bullet C_{VCO}}$$

The Error Amplifier directly controls the oscillator frequency. E/A output low corresponds to minimum frequency and output high corresponds to maximum frequency. At the end of each oscillator cycle, the RC pin is discharged to one diode drop above ground. At the beginning of the oscillator cycle, V(RC) is less than Vth1 and so the output of the zero detect comparator is ignored. After V(RC) exceeds Vth1, the one shot pulse will be terminated as soon as the zero pin falls below 0.5V or V(RC) exceeds Vth2. The minimum one shot pulse width is approximately given by the equation:

$$Tpw(min) \quad 0.3 \quad R \quad C.$$

The maximum pulse width is approximately given by:

$$Tpw(max) \quad 1.2 \quad R \quad C.$$

STEERING LOGIC

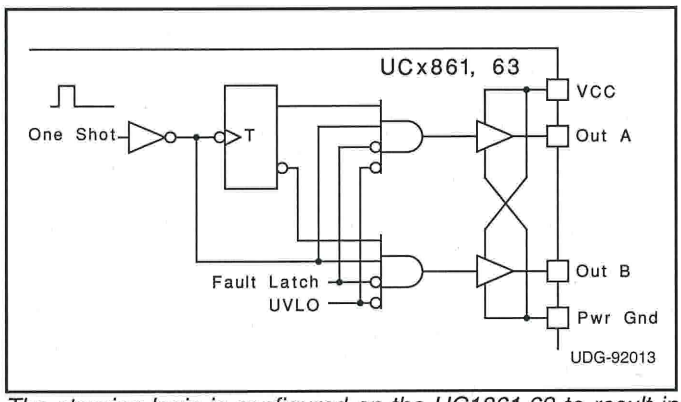

The steering logic is configured on the UC1861,63 to result in dual non-overlapping square waves at outputs A & B. This is suited to drive dual switch ZVS systems.

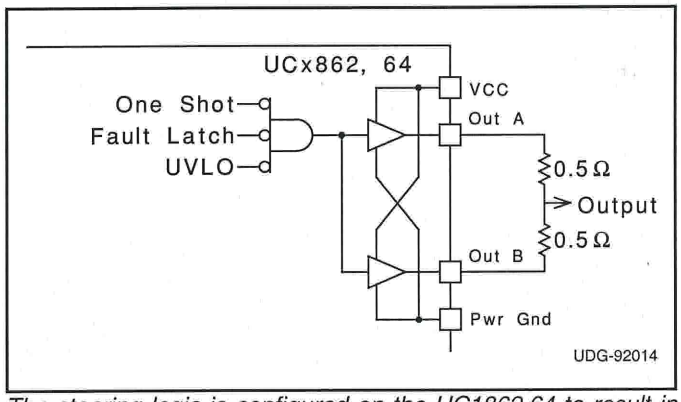

The steering logic is configured on the UC1862,64 to result in inverted pulse trains occurring identically at both output pins. This is suited to drive single switch ZVS systems. Both outputs are available to drive the same MOSFET gate. It is advisable to join the pins with 0.5 ohm resistors.

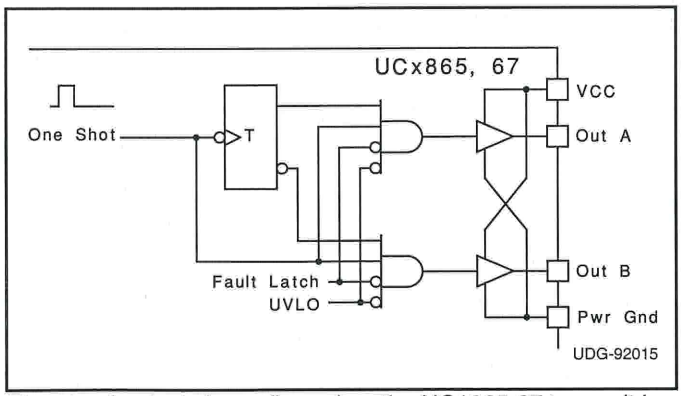

The steering logic is configured on the UC1865,67 to result in alternating pulse trains at outputs A & B. This is suited to drive dual switch ZCS systems.

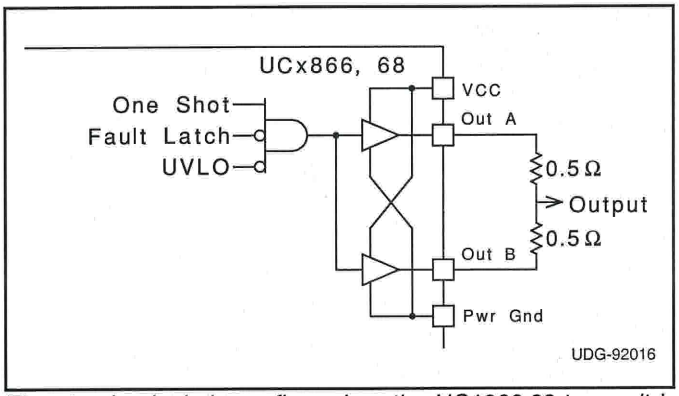

The steering logic is configured on the UC1866,68 to result in non-inverted pulse trains occurring identically at both output pins. This is suited to drive single switch ZCS systems. Both outputs are available to drive the same MOSFET gate. It is advisable to join the pins with 0.5 ohm resistors.

APPLICATION INFORMATION (cont.)

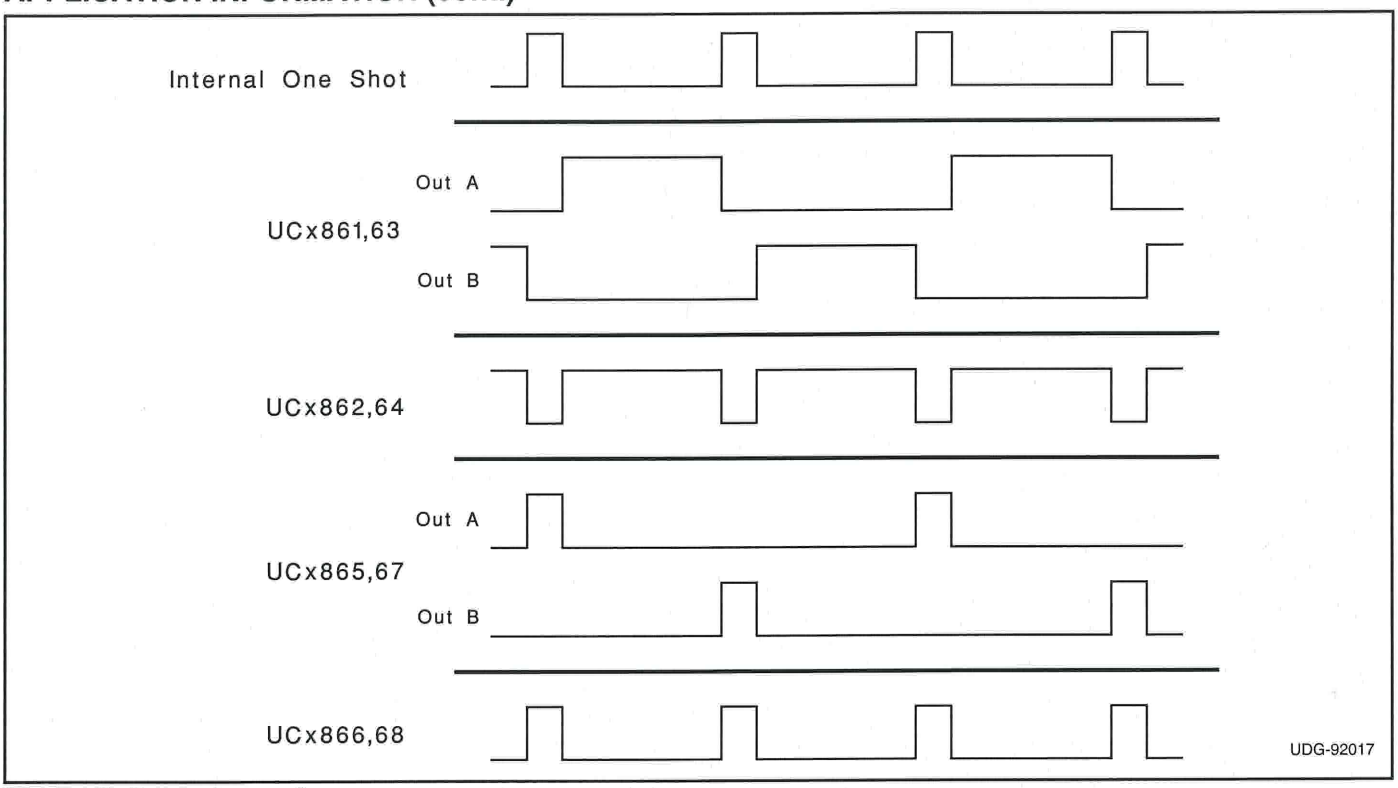

Figure 3. Current waveforms.

PACKAGING INFORMATION

Orderable Device	Status (1)	Package Type	Package Drawing	Pins	Package Qty	Eco Plan (2)	Lead/ Ball Finish	MSL Peak Temp (3)	Samples (Requires Login)
5962-9203101M2A	OBSOLETE	LCCC	FK	20		TBD	Call TI	Call TI	Samples Not Available
5962-9203101MEA	OBSOLETE	CDIP	J	16		TBD	Call TI	Call TI	Samples Not Available
5962-9203102MEA	OBSOLETE	CDIP	J	16		TBD	Call TI	Call TI	Samples Not Available
5962-9203103Q2A	ACTIVE	LCCC	FK	20	1	TBD	POST-PLATE	N / A for Pkg Type	Purchase Samples
5962-9203103QEA	ACTIVE	CDIP	J	16	1	TBD	A42	N / A for Pkg Type	Purchase Samples
UC1861J	OBSOLETE	CDIP	J	16		TBD	Call TI	Call TI	Samples Not Available
UC1861J883B	OBSOLETE	CDIP	J	16		TBD	Call TI	Call TI	Samples Not Available
UC1863J	ACTIVE	CDIP	J	16	1	TBD	A42	N / A for Pkg Type	Contact TI Distributor or Sales Office
UC1863J883B	ACTIVE	CDIP	J	16	1	TBD	A42	N / A for Pkg Type	Contact TI Distributor or Sales Office
UC1863L	ACTIVE	LCCC	FK	20	1	TBD	POST-PLATE	N / A for Pkg Type	Contact TI Distributor or Sales Office
UC1863L883B	ACTIVE	LCCC	FK	20	1	TBD	POST-PLATE	N / A for Pkg Type	Contact TI Distributor or Sales Office
UC1864J	OBSOLETE	CDIP	J	16		TBD	Call TI	Call TI	Samples Not Available
UC1864J883B	OBSOLETE	CDIP	J	16		TBD	Call TI	Call TI	Samples Not Available
UC1864L	OBSOLETE	LCCC	FK	20		TBD	Call TI	Call TI	Samples Not Available
UC1864L883B	OBSOLETE	LCCC	FK	20		TBD	Call TI	Call TI	Samples Not Available
UC1865J	OBSOLETE	CDIP	J	16		TBD	Call TI	Call TI	Samples Not Available
UC1865J883B	OBSOLETE	CDIP	J	16		TBD	Call TI	Call TI	Samples Not Available
UC1867J	OBSOLETE	CDIP	J	16		TBD	Call TI	Call TI	Replaced by UC1863J
UC1867L	OBSOLETE	LCCC	FK	20		TBD	Call TI	Call TI	Replaced by UC1863L
UC2861DW	ACTIVE	SOIC	DW	16	40	Green (RoHS & no Sb/Br)	CU NIPDAU	Level-2-260C-1 YEAR	Request Free Samples
UC2861DWG4	ACTIVE	SOIC	DW	16	40	Green (RoHS & no Sb/Br)	CU NIPDAU	Level-2-260C-1 YEAR	Request Free Samples
UC2861Q	ACTIVE	PLCC	FN	20	46	Green (RoHS & no Sb/Br)	CU SN	Level-2-260C-1 YEAR	Purchase Samples
UC2861QG3	ACTIVE	PLCC	FN	20	46	Green (RoHS & no Sb/Br)	CU SN	Level-2-260C-1 YEAR	Purchase Samples

Orderable Device	Status (1)	Package Type	Package Drawing	Pins	Package Qty	Eco Plan (2)	Lead/ Ball Finish	MSL Peak Temp (3)	Samples (Requires Login)
UC2863DW	ACTIVE	SOIC	DW	16	40	Green (RoHS & no Sb/Br)	CU NIPDAU	Level-2-260C-1 YEAR	Purchase Samples
UC2863DWG4	ACTIVE	SOIC	DW	16	40	Green (RoHS & no Sb/Br)	CU NIPDAU	Level-2-260C-1 YEAR	Purchase Samples
UC2863N	ACTIVE	PDIP	N	16	25	Green (RoHS & no Sb/Br)	CU NIPDAU	N / A for Pkg Type	Purchase Samples
UC2863NG4	ACTIVE	PDIP	N	16	25	Green (RoHS & no Sb/Br)	CU NIPDAU	N / A for Pkg Type	Purchase Samples
UC2864DW	ACTIVE	SOIC	DW	16	40	Green (RoHS & no Sb/Br)	CU NIPDAU	Level-2-260C-1 YEAR	Request Free Samples
UC2864DWG4	ACTIVE	SOIC	DW	16	40	Green (RoHS & no Sb/Br)	CU NIPDAU	Level-2-260C-1 YEAR	Request Free Samples
UC2865N	ACTIVE	PDIP	N	16	25	Green (RoHS & no Sb/Br)	CU NIPDAU	N / A for Pkg Type	Purchase Samples
UC2865NG4	ACTIVE	PDIP	N	16	25	Green (RoHS & no Sb/Br)	CU NIPDAU	N / A for Pkg Type	Purchase Samples
UC2866N	ACTIVE	PDIP	N	16	25	Green (RoHS & no Sb/Br)	CU NIPDAU	N / A for Pkg Type	Request Free Samples
UC2866NG4	ACTIVE	PDIP	N	16	25	Green (RoHS & no Sb/Br)	CU NIPDAU	N / A for Pkg Type	Request Free Samples
UC3861DW	ACTIVE	SOIC	DW	16	40	Green (RoHS & no Sb/Br)	CU NIPDAU	Level-2-260C-1 YEAR	Request Free Samples
UC3861DWG4	ACTIVE	SOIC	DW	16	40	Green (RoHS & no Sb/Br)	CU NIPDAU	Level-2-260C-1 YEAR	Request Free Samples
UC3861N	ACTIVE	PDIP	N	16	25	Green (RoHS & no Sb/Br)	CU NIPDAU	N / A for Pkg Type	Request Free Samples
UC3861NG4	ACTIVE	PDIP	N	16	25	Green (RoHS & no Sb/Br)	CU NIPDAU	N / A for Pkg Type	Request Free Samples
UC3862N	ACTIVE	PDIP	N	16	25	Green (RoHS & no Sb/Br)	CU NIPDAU	N / A for Pkg Type	Request Free Samples
UC3862NG4	ACTIVE	PDIP	N	16	25	Green (RoHS & no Sb/Br)	CU NIPDAU	N / A for Pkg Type	Request Free Samples
UC3863DW	ACTIVE	SOIC	DW	16	40	Green (RoHS & no Sb/Br)	CU NIPDAU	Level-2-260C-1 YEAR	Purchase Samples
UC3863DWG4	ACTIVE	SOIC	DW	16	40	Green (RoHS & no Sb/Br)	CU NIPDAU	Level-2-260C-1 YEAR	Purchase Samples

Orderable Device	Status (1)	Package Type	Package Drawing	Pins	Package Qty	Eco Plan (2)	Lead/ Ball Finish	MSL Peak Temp (3)	Samples (Requires Login)
UC3863DWTR	ACTIVE	SOIC	DW	16	2000	Green (RoHS & no Sb/Br)	CU NIPDAU	Level-2-260C-1 YEAR	Purchase Samples
UC3863DWTRG4	ACTIVE	SOIC	DW	16	2000	Green (RoHS & no Sb/Br)	CU NIPDAU	Level-2-260C-1 YEAR	Purchase Samples
UC3863N	ACTIVE	PDIP	N	16	25	Green (RoHS & no Sb/Br)	CU NIPDAU	N / A for Pkg Type	Request Free Samples
UC3863NG4	ACTIVE	PDIP	N	16	25	Green (RoHS & no Sb/Br)	CU NIPDAU	N / A for Pkg Type	Request Free Samples
UC3864N	ACTIVE	PDIP	N	16	25	Green (RoHS & no Sb/Br)	CU NIPDAU	N / A for Pkg Type	Request Free Samples
UC3864NG4	ACTIVE	PDIP	N	16	25	Green (RoHS & no Sb/Br)	CU NIPDAU	N / A for Pkg Type	Request Free Samples
UC3865DW	ACTIVE	SOIC	DW	16	40	Green (RoHS & no Sb/Br)	CU NIPDAU	Level-2-260C-1 YEAR	Purchase Samples
UC3865DWG4	ACTIVE	SOIC	DW	16	40	Green (RoHS & no Sb/Br)	CU NIPDAU	Level-2-260C-1 YEAR	Purchase Samples
UC3865DWTR	ACTIVE	SOIC	DW	16		Green (RoHS & no Sb/Br)	CU NIPDAU	Level-2-260C-1 YEAR	Purchase Samples
UC3865DWTRG4	ACTIVE	SOIC	DW	16		Green (RoHS & no Sb/Br)	CU NIPDAU	Level-2-260C-1 YEAR	Purchase Samples
UC3865N	ACTIVE	PDIP	N	16	25	Green (RoHS & no Sb/Br)	CU NIPDAU	N / A for Pkg Type	Request Free Samples
UC3865NG4	ACTIVE	PDIP	N	16	25	Green (RoHS & no Sb/Br)	CU NIPDAU	N / A for Pkg Type	Request Free Samples
UC3865Q	ACTIVE	PLCC	FN	20	46	Green (RoHS & no Sb/Br)	CU SN	Level-2-260C-1 YEAR	Purchase Samples
UC3865QG3	ACTIVE	PLCC	FN	20	46	Green (RoHS & no Sb/Br)	CU SN	Level-2-260C-1 YEAR	Purchase Samples
UC3867DW	ACTIVE	SOIC	DW	16	40	Green (RoHS & no Sb/Br)	CU NIPDAU	Level-2-260C-1 YEAR	Purchase Samples
UC3867DWG4	ACTIVE	SOIC	DW	16	40	Green (RoHS & no Sb/Br)	CU NIPDAU	Level-2-260C-1 YEAR	Purchase Samples
UC3867DWTR	ACTIVE	SOIC	DW	16	2000	Green (RoHS & no Sb/Br)	CU NIPDAU	Level-2-260C-1 YEAR	Purchase Samples
UC3867DWTRG4	ACTIVE	SOIC	DW	16	2000	Green (RoHS & no Sb/Br)	CU NIPDAU	Level-2-260C-1 YEAR	Purchase Samples

Orderable Device	Status (1)	Package Type	Package Drawing	Pins	Package Qty	Eco Plan (2)	Lead/ Ball Finish	MSL Peak Temp (3)	Samples (Requires Login)
UC3867N	ACTIVE	PDIP	N	16	25	Green (RoHS & no Sb/Br)	CU NIPDAU	N / A for Pkg Type	Request Free Samples
UC3867NG4	ACTIVE	PDIP	N	16	25	Green (RoHS & no Sb/Br)	CU NIPDAU	N / A for Pkg Type	Request Free Samples
UC3868N	ACTIVE	PDIP	N	16	25	Green (RoHS & no Sb/Br)	CU NIPDAU	N / A for Pkg Type	Request Free Samples
UC3868NG4	ACTIVE	PDIP	N	16	25	Green (RoHS & no Sb/Br)	CU NIPDAU	N / A for Pkg Type	Request Free Samples

(1) The marketing status values are defined as follows:
ACTIVE: Product device recommended for new designs.
LIFEBUY: TI has announced that the device will be discontinued, and a lifetime-buy period is in effect.
NRND: Not recommended for new designs. Device is in production to support existing customers, but TI does not recommend using this part in a new design.
PREVIEW: Device has been announced but is not in production. Samples may or may not be available.
OBSOLETE: TI has discontinued the production of the device.

(2) Eco Plan - The planned eco-friendly classification: Pb-Free (RoHS), Pb-Free (RoHS Exempt), or Green (RoHS & no Sb/Br) - please check http://www.ti.com/productcontent for the latest availability information and additional product content details.
TBD: The Pb-Free/Green conversion plan has not been defined.
Pb-Free (RoHS): TI's terms "Lead-Free" or "Pb-Free" mean semiconductor products that are compatible with the current RoHS requirements for all 6 substances, including the requirement that lead not exceed 0.1% by weight in homogeneous materials. Where designed to be soldered at high temperatures, TI Pb-Free products are suitable for use in specified lead-free processes.
Pb-Free (RoHS Exempt): This component has a RoHS exemption for either 1) lead-based flip-chip solder bumps used between the die and package, or 2) lead-based die adhesive used between the die and leadframe. The component is otherwise considered Pb-Free (RoHS compatible) as defined above.
Green (RoHS & no Sb/Br): TI defines "Green" to mean Pb-Free (RoHS compatible), and free of Bromine (Br) and Antimony (Sb) based flame retardants (Br or Sb do not exceed 0.1% by weight in homogeneous material)

(3) MSL, Peak Temp. -- The Moisture Sensitivity Level rating according to the JEDEC industry standard classifications, and peak solder temperature.

Important Information and Disclaimer: The information provided on this page represents TI's knowledge and belief as of the date that it is provided. TI bases its knowledge and belief on information provided by third parties, and makes no representation or warranty as to the accuracy of such information. Efforts are underway to better integrate information from third parties. TI has taken and continues to take reasonable steps to provide representative and accurate information but may not have conducted destructive testing or chemical analysis on incoming materials and chemicals. TI and TI suppliers consider certain information to be proprietary, and thus CAS numbers and other limited information may not be available for release.

In no event shall TI's liability arising out of such information exceed the total purchase price of the TI part(s) at issue in this document sold by TI to Customer on an annual basis.

OTHER QUALIFIED VERSIONS OF UC1861, UC1863, UC1864, UC1865, UC1867, UC3861, UC3863, UC3864, UC3865, UC3867 :

- Catalog: UC3861, UC3863, UC3864, UC3865, UC3867

- Military: UC1861, UC1863, UC1864, UC1865, UC1867
- Space: UC1863-SP

NOTE: Qualified Version Definitions:

- Catalog - TI's standard catalog product
- Military - QML certified for Military and Defense Applications
- Space - Radiation tolerant, ceramic packaging and qualified for use in Space-based application

TAPE AND REEL INFORMATION

REEL DIMENSIONS

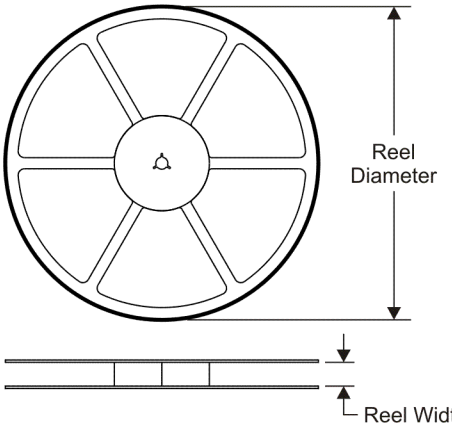

TAPE DIMENSIONS

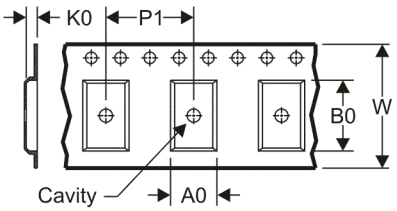

A0	Dimension designed to accommodate the component width
B0	Dimension designed to accommodate the component length
K0	Dimension designed to accommodate the component thickness
W	Overall width of the carrier tape
P1	Pitch between successive cavity centers

QUADRANT ASSIGNMENTS FOR PIN 1 ORIENTATION IN TAPE

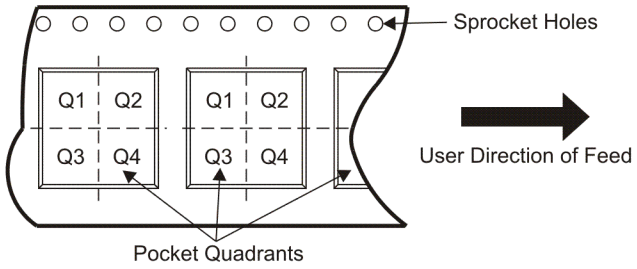

*All dimensions are nominal

Device	Package Type	Package Drawing	Pins	SPQ	Reel Diameter (mm)	Reel Width W1 (mm)	A0 (mm)	B0 (mm)	K0 (mm)	P1 (mm)	W (mm)	Pin1 Quadrant
UC3863DWTR	SOIC	DW	16	2000	330.0	16.4	10.85	10.8	2.7	12.0	16.0	Q1
UC3867DWTR	SOIC	DW	16	2000	330.0	16.4	10.85	10.8	2.7	12.0	16.0	Q1

TAPE AND REEL BOX DIMENSIONS

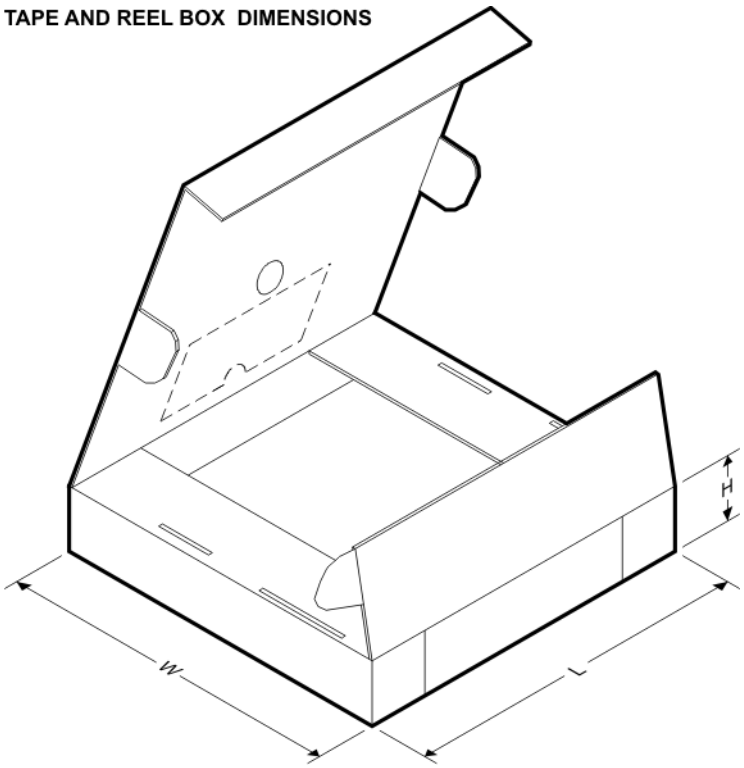

*All dimensions are nominal

Device	Package Type	Package Drawing	Pins	SPQ	Length (mm)	Width (mm)	Height (mm)
UC3863DWTR	SOIC	DW	16	2000	346.0	346.0	33.0
UC3867DWTR	SOIC	DW	16	2000	346.0	346.0	33.0

IMPORTANT NOTICE

Texas Instruments Incorporated and its subsidiaries (TI) reserve the right to make corrections, modifications, enhancements, improvements, and other changes to its products and services at any time and to discontinue any product or service without notice. Customers should obtain the latest relevant information before placing orders and should verify that such information is current and complete. All products are sold subject to TI's terms and conditions of sale supplied at the time of order acknowledgment.

TI warrants performance of its hardware products to the specifications applicable at the time of sale in accordance with TI's standard warranty. Testing and other quality control techniques are used to the extent TI deems necessary to support this warranty. Except where mandated by government requirements, testing of all parameters of each product is not necessarily performed.

TI assumes no liability for applications assistance or customer product design. Customers are responsible for their products and applications using TI components. To minimize the risks associated with customer products and applications, customers should provide adequate design and operating safeguards.

TI does not warrant or represent that any license, either express or implied, is granted under any TI patent right, copyright, mask work right, or other TI intellectual property right relating to any combination, machine, or process in which TI products or services are used. Information published by TI regarding third-party products or services does not constitute a license from TI to use such products or services or a warranty or endorsement thereof. Use of such information may require a license from a third party under the patents or other intellectual property of the third party, or a license from TI under the patents or other intellectual property of TI.

Reproduction of TI information in TI data books or data sheets is permissible only if reproduction is without alteration and is accompanied by all associated warranties, conditions, limitations, and notices. Reproduction of this information with alteration is an unfair and deceptive business practice. TI is not responsible or liable for such altered documentation. Information of third parties may be subject to additional restrictions.

Resale of TI products or services with statements different from or beyond the parameters stated by TI for that product or service voids all express and any implied warranties for the associated TI product or service and is an unfair and deceptive business practice. TI is not responsible or liable for any such statements.

TI products are not authorized for use in safety-critical applications (such as life support) where a failure of the TI product would reasonably be expected to cause severe personal injury or death, unless officers of the parties have executed an agreement specifically governing such use. Buyers represent that they have all necessary expertise in the safety and regulatory ramifications of their applications, and acknowledge and agree that they are solely responsible for all legal, regulatory and safety-related requirements concerning their products and any use of TI products in such safety-critical applications, notwithstanding any applications-related information or support that may be provided by TI. Further, Buyers must fully indemnify TI and its representatives against any damages arising out of the use of TI products in such safety-critical applications.

TI products are neither designed nor intended for use in military/aerospace applications or environments unless the TI products are specifically designated by TI as military-grade or "enhanced plastic." Only products designated by TI as military-grade meet military specifications. Buyers acknowledge and agree that any such use of TI products which TI has not designated as military-grade is solely at the Buyer's risk, and that they are solely responsible for compliance with all legal and regulatory requirements in connection with such use.

TI products are neither designed nor intended for use in automotive applications or environments unless the specific TI products are designated by TI as compliant with ISO/TS 16949 requirements. Buyers acknowledge and agree that, if they use any non-designated products in automotive applications, TI will not be responsible for any failure to meet such requirements.

Following are URLs where you can obtain information on other Texas Instruments products and application solutions:

Products		**Applications**	
Amplifiers	amplifier.ti.com	Audio	www.ti.com/audio
Data Converters	dataconverter.ti.com	Automotive	www.ti.com/automotive
DLP® Products	www.dlp.com	Communications and Telecom	www.ti.com/communications
DSP	dsp.ti.com	Computers and Peripherals	www.ti.com/computers
Clocks and Timers	www.ti.com/clocks	Consumer Electronics	www.ti.com/consumer-apps
Interface	interface.ti.com	Energy	www.ti.com/energy
Logic	logic.ti.com	Industrial	www.ti.com/industrial
Power Mgmt	power.ti.com	Medical	www.ti.com/medical
Microcontrollers	microcontroller.ti.com	Security	www.ti.com/security
RFID	www.ti-rfid.com	Space, Avionics & Defense	www.ti.com/space-avionics-defense
RF/IF and ZigBee® Solutions	www.ti.com/lprf	Video and Imaging	www.ti.com/video
		Wireless	www.ti.com/wireless-apps

Mailing Address: Texas Instruments, Post Office Box 655303, Dallas, Texas 75265
Copyright © 2010, Texas Instruments Incorporated