STK-084G, 086G

thick film hybrid IC

50, 70W min AF POWER AMP

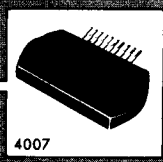

Features

- © IMST, 1 Channel by 2 Power Supply.
- AF Output Power STK-084G: 50 W min.
  STK-086G: 70 W min.
- Low distortion.
- Able to add a peripheral protector.

MAXIMUM RATING/Ta=25°C

		STK-084G	STK-086G	unit
Maximum Supply Voltage	V_{CC} max	±50	±55	V
Collector Current	I_C max	–	7	A
Thermal Coefficient	$\theta_{j-c}(T_C=25°C)$	–	1.4	°C/W
Operating Case Temperature	T_C	→	90	°C
Storage Temperature	Tstg	→	-30 to +105	°C
Allowable Load Shorting Time (in appointed condition)	t_s	2	–	sec

RECOMMENDED OPERATION CONDITION/Ta=25°C

		STK-084G	STK-086G	unit
Recommended Supply Voltage	V_{CC}	±35	±42	V
Load Resistance	R_L	→	8	ohm

OPERATION CHARACTERISTICS/Ta=25°C, recommended V_{CC} supplied, R_L=8 ohm, Rg=600 ohm, VG=33.4 dB

			STK-084G	STK-086G	unit
Quiescent Current	I_{CCO}		→	100	mAmax
Output Power	Po	THD=0.03%, f=20 to 20kHz	50	70	W min
Distortion	THD	Po=0.25W, f=20 to 20kHz	→	0.05	% max
Frequency Response	f	Po=1 W, –1 dB	→	10 to 100k	Hz
Input Resistance	r_i	Po=1 W, f=1 kHz	→	52k	ohm

Datasheet.Support

EQUIVALENT CIRCUIT

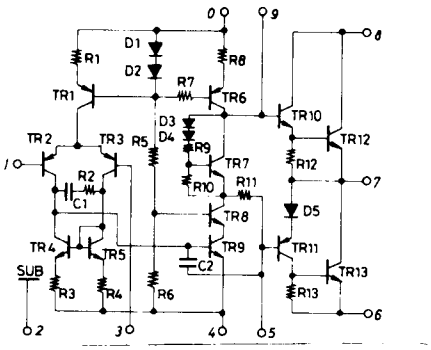

APPLICATION: AF Power Amp.

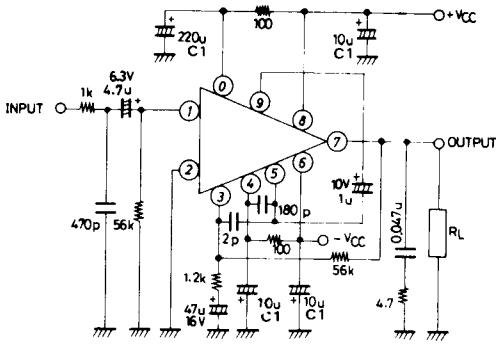

	C1
STK-084G	50V
STK-086G	63V

See the operation characteristics on this specification.

www.audiolabga.com