ES1A - ES1G

1.0A SURFACE MOUNT SUPER-FAST RECTIFIER

SPICE MODELS: ES1A ES1B ES1C ES1D ES1G

Features

- Glass Passivated Die Construction
- Super-Fast Recovery Time For High Efficiency
- Low Forward Voltage Drop and High Current Capability
- Surge Overload Rating to 30A Peak
- Ideally Suited for Automated Assembly

Mechanical Data

- Case: Molded Plastic
- Case Material - UL Flammability Rating Classification 94V-0
- Moisture sensitivity: Level 1 per J-STD-020A
- Terminals: Solder Plated Terminal - Solderable per MIL-STD-202, Method 208
- Polarity: Cathode Band or Cathode Notch
- Marking: Type Number & Date Code: See Below
- Ordering Information: See Below
- Weight: 0.064 grams (approx.)

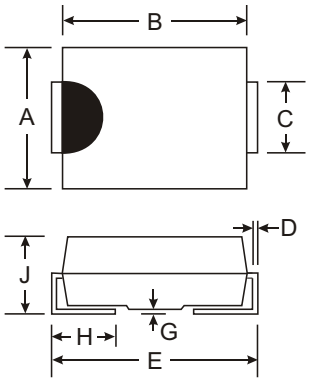

SMA		
Dim	Min	Max
A	2.29	2.92
B	4.00	4.60
C	1.27	1.63
D	0.15	0.31
E	4.80	5.59
G	0.10	0.20
H	0.76	1.52
J	2.01	2.62
All Dimensions in mm		

Maximum Ratings and Electrical Characteristics @ T_A = 25°C unless otherwise specified

Single phase, half wave, 60Hz, resistive or inductive load.
For capacitive load, derate current by 20%.

Datasheet.Support

Characteristic	Symbol	ES1A	ES1B	ES1C	ES1D	ES1G	Unit
Peak Repetitive Reverse Voltage Working Peak Reverse Voltage DC Blocking Voltage	V_{RRM} V_{RWM} V_R	50	100	150	200	400	V
RMS Reverse Voltage	$V_{R(RMS)}$	35	70	105	140	280	V
Average Rectified Output Current @ T_T = 110°C	I_O	1.0					A
Non-Repetitive Peak Forward Surge Current 8.3ms Single half sine-wave Superimposed on Rated Load (JEDEC Method)	I_{FSM}	30					A
Forward Voltage Drop @ I_F = 0.6A @ I_F = 1.0A	V_{FM}	0.90 0.98				— 1.25	V
Peak Reverse Current @ T_A = 25°C at Rated DC Blocking Voltage @ T_A = 100°C	I_{RM}	5.0 200					μA
Reverse Recovery Time (Note 1)	t_{rr}	25				35	ns
Typical Total Capacitance (Note 2)	C_T	10					pF
Typical Thermal Resistance, Junction to Terminal (Note 3)	$R_{\theta JT}$	40					°C/W
Operating and Storage Temperature Range	T_j, T_{STG}	-65 to +150					°C

Ordering Information (Note 4)

Device*	Packaging	Shipping
ES1x-13	SMA	5000/Tape & Reel

Notes:
1. Measured with I_F = 0.5A, I_R = 1.0A, I_{rr} = 0.25A. See figure 5.
2. Measured at 1.0MHz and applied reverse voltage of 4.0V DC.
3. Unit mounted on PC board with 5.0 mm² (0.013 mm thick) copper pad as heat sink.
4. For Packaging Details, go to our website at http://www.diodes.com/datasheets/ap02007.pdf.

*x = Device type, e.g. ES1A-13.

Marking Information

XXXX = Product type marking code, ex. ES1A
= Manufacturers' code marking
YWW = Date code marking
Y = Last digit of year ex: 2 for 2002
WW = Week code 01 to 52

© Diodes Incorporated

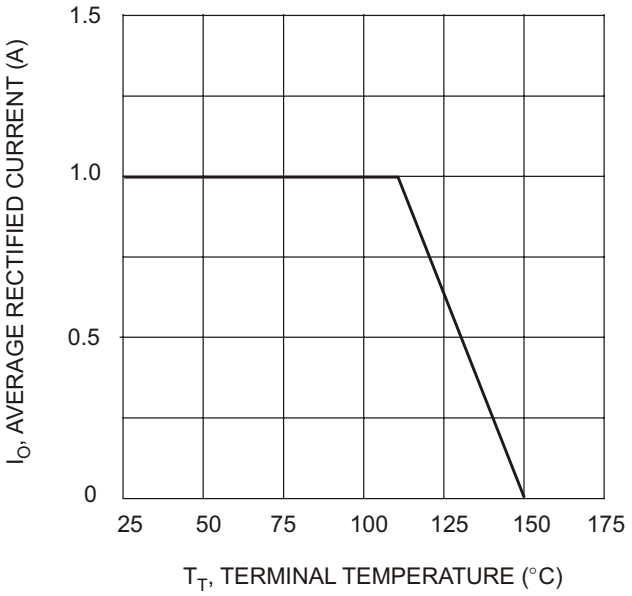

Fig. 1 Forward Current Derating Curve

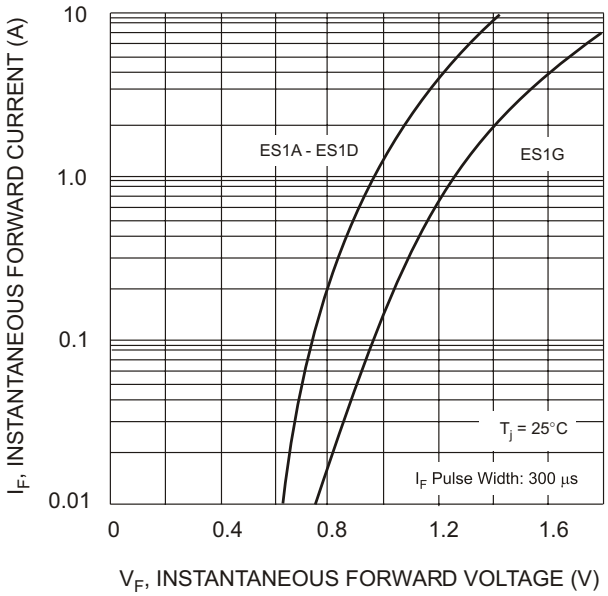

Fig. 2 Typical Forward Characteristics

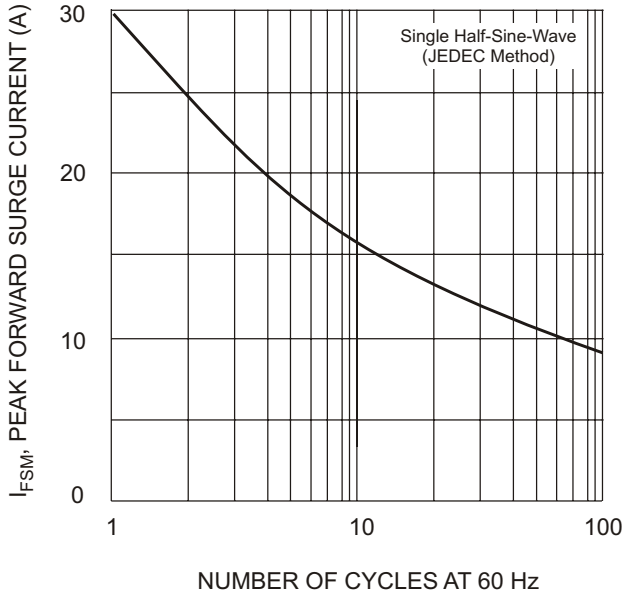

Fig. 3 Surge Current Derating Curve

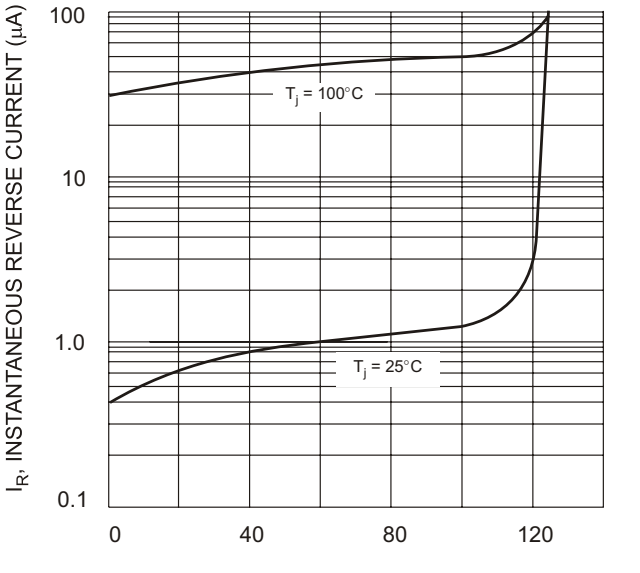

Fig. 4 Typical Reverse Characteristics

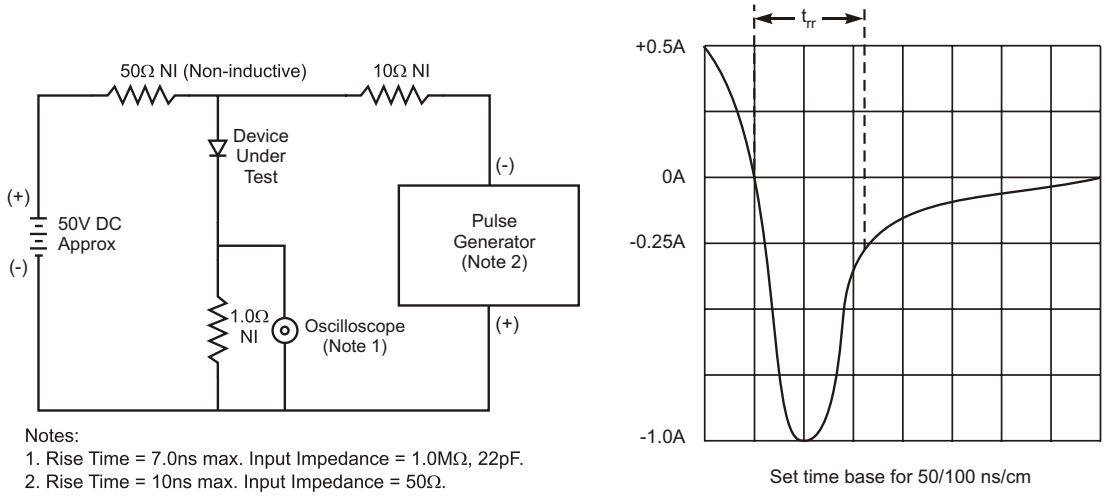

Notes:
1. Rise Time = 7.0ns max. Input Impedance = 1.0MΩ, 22pF.
2. Rise Time = 10ns max. Input Impedance = 50Ω.

Fig. 5 Reverse Recovery Time Characteristic and Test Circuit